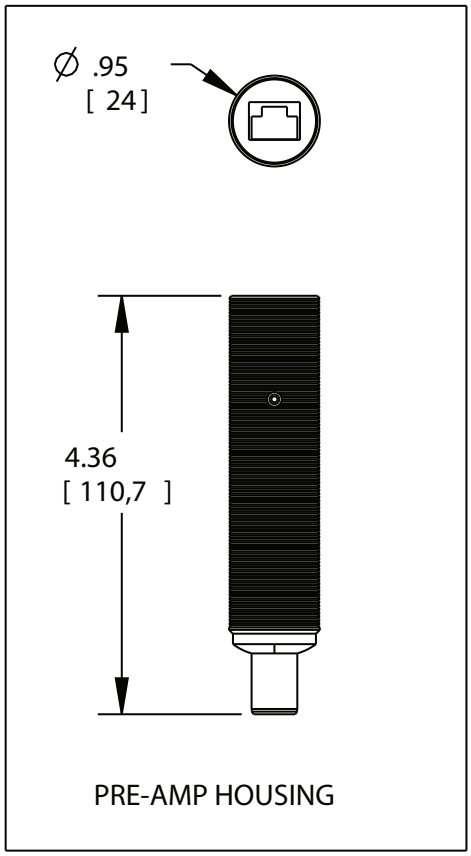

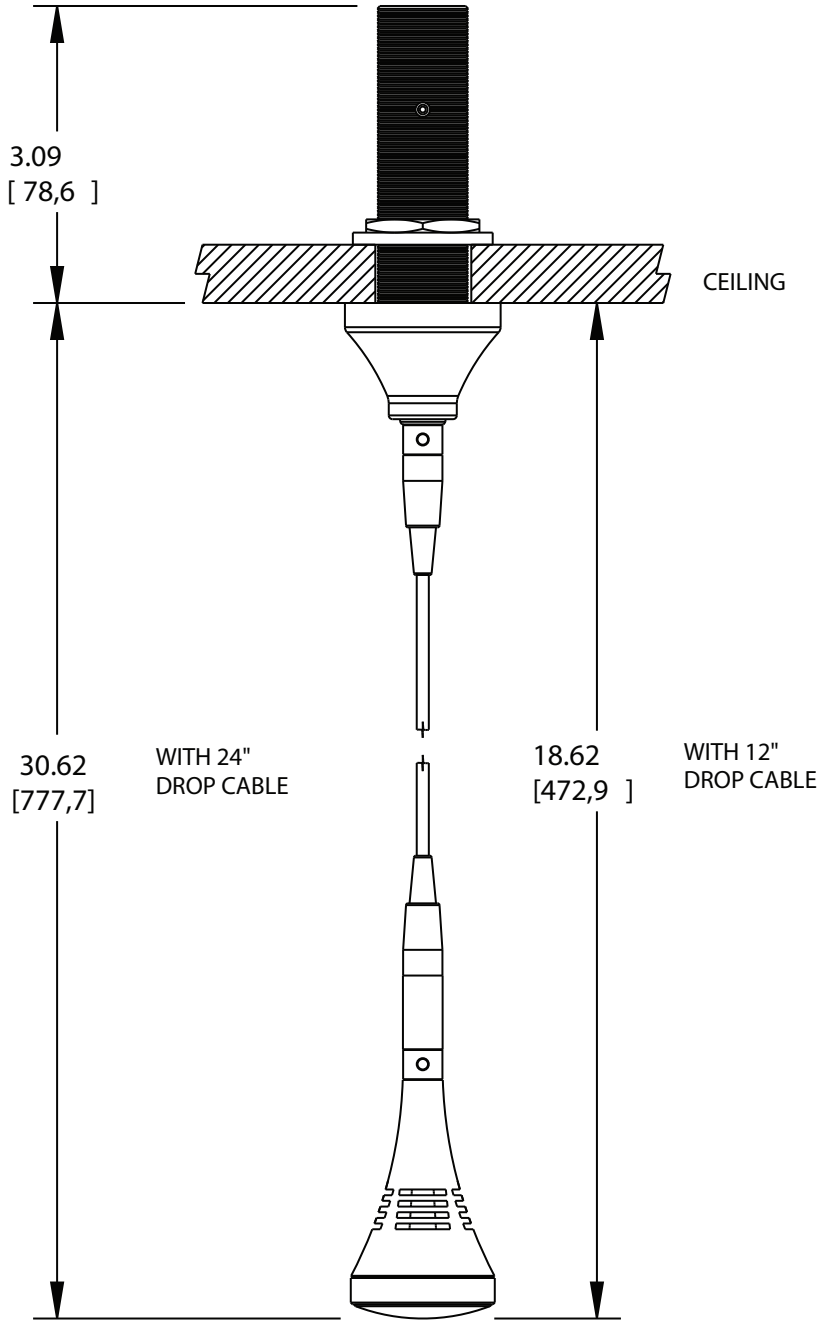

INCHES
[MM]

North America
Tel: 801-975-7200
Toll Free: 800-945-7730
TechSales: 1-800-707-6994
Fax: 801-977-0087
sales@clearone.com

Europe & Oceania
Tel: +44 (0) 1189 036 053
global@clearone.com

Asia Pacific
Tel: +852 3590 4526
global@clearone.com

Latin America
Tel: 801-974-3621
global@clearone.com

Middle East
Tel: +852 3590 4526
global@clearone.com

Other product names may be registered trademarks of their respective owners who do not necessarily endorse ClearOne or ClearOne's products. All rights reserved. Information in this document subject to change without notice. © 2012 ClearOne, August 2012.